9345 Block Diagram

Stereo Analog Audio to AES A/D Converter

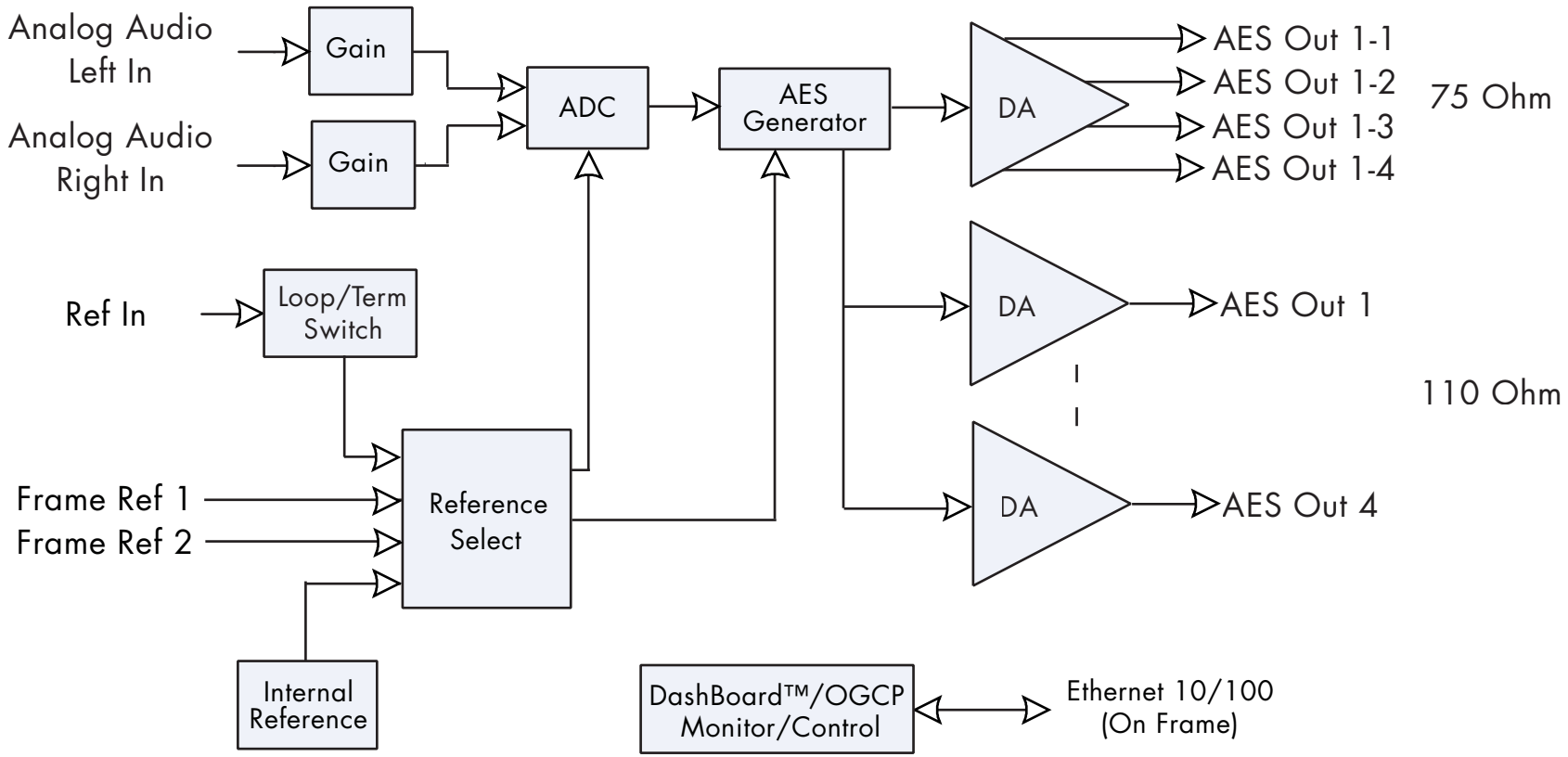

Cobalt Digital Inc.
2406 E. University Ave.
Urbana IL, 61802

217.344.1243
info@cobaltdigital.com
www.cobaltdigital.com