9410-OE-CWDML Series Block Diagram

3G/HD/SD-SDI/ASI/MADI OE CWDM Receivers

with Built-In Looping Fiber De-Mux

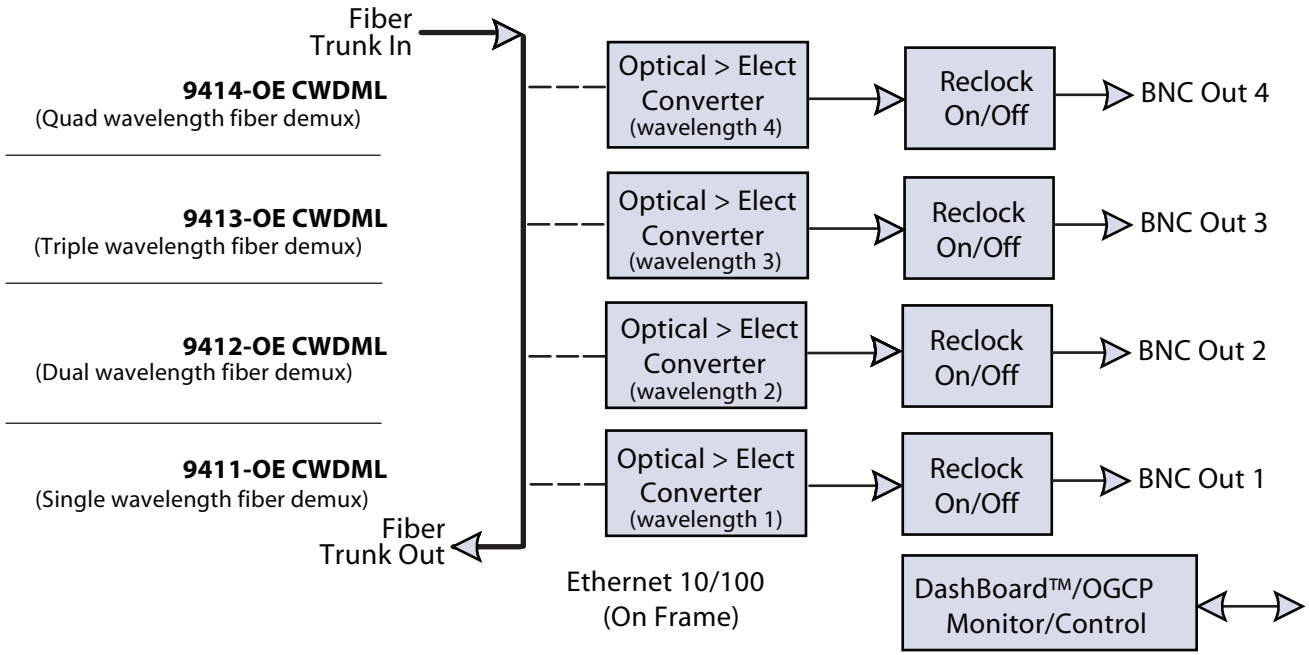

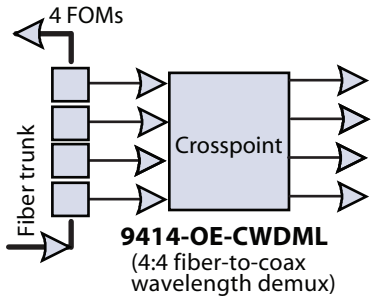

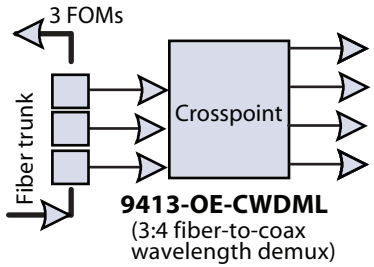

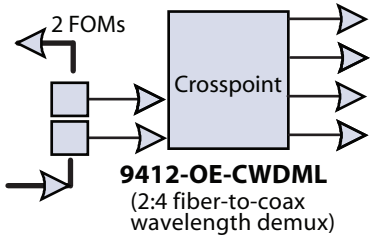

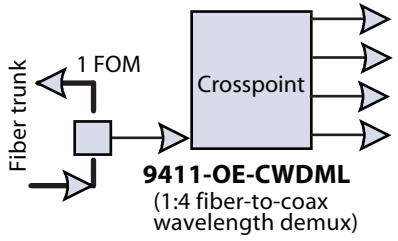

Cobalt Digital Inc.
2406 E. University Ave.
Urbana IL, 61802

217.344.1243
info@cobaltdigital.com
www.cobaltdigital.com