9903-UDX-ADDA Block Diagram

3G/HD/SD-SDI Universal Format Converter

with CVBS/YPbPr Video I/O, Up/Down/Cross Conversion, Framesync, AES and Analog Audio Embedding / De-Embedding

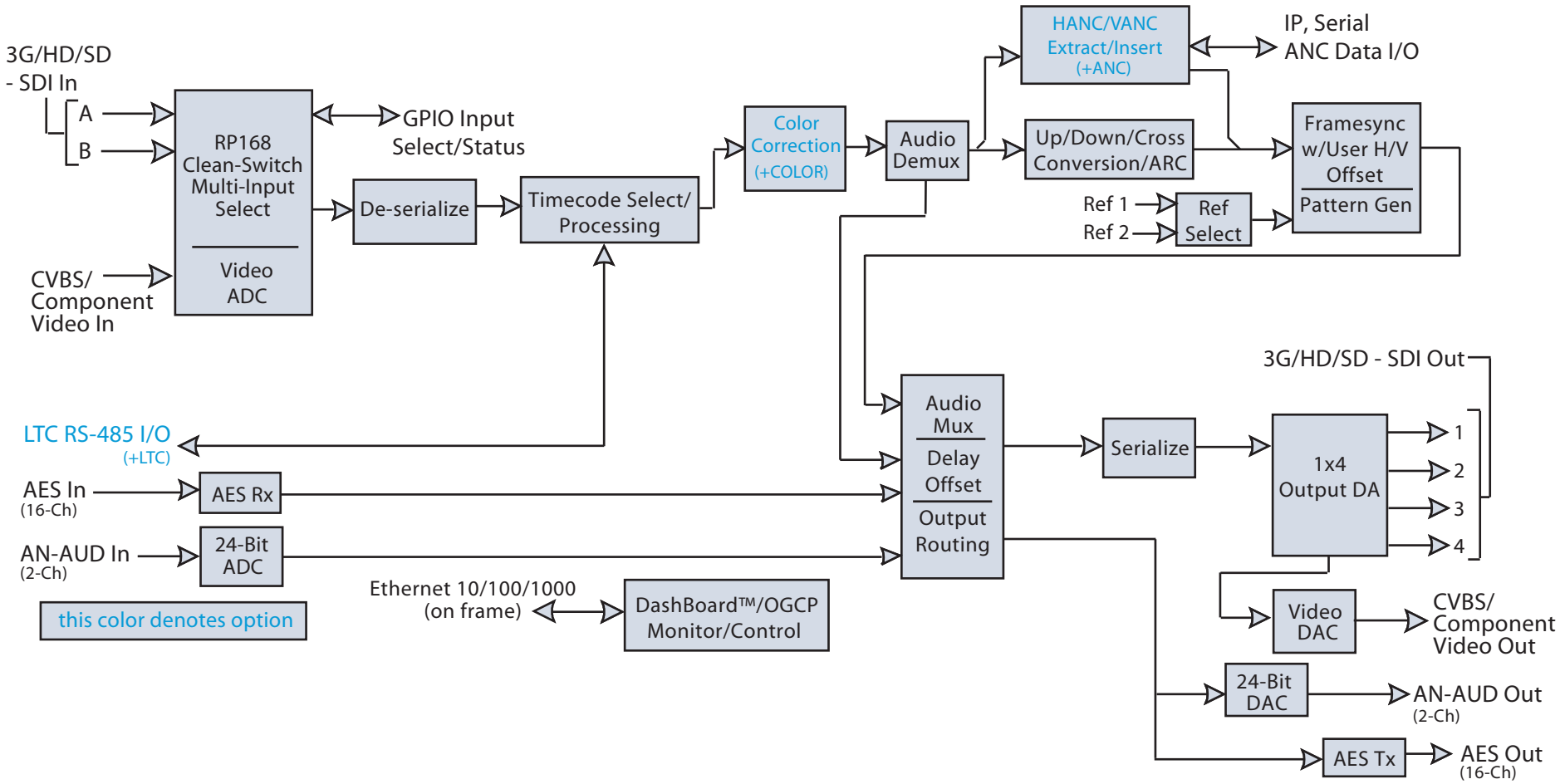

COBALT

Cobalt Digital Inc.
2506 Galen Drive
Champaign IL, 61821

217.344.1243
info@cobaltdigital.com
www.cobaltdigital.com