BBG-1002-2UDX Block Diagram

3G/HD/SD-SDI Standalone Dual-Channel Up-Down-Cross Converter / Frame Sync / Audio Embed/De-Embed

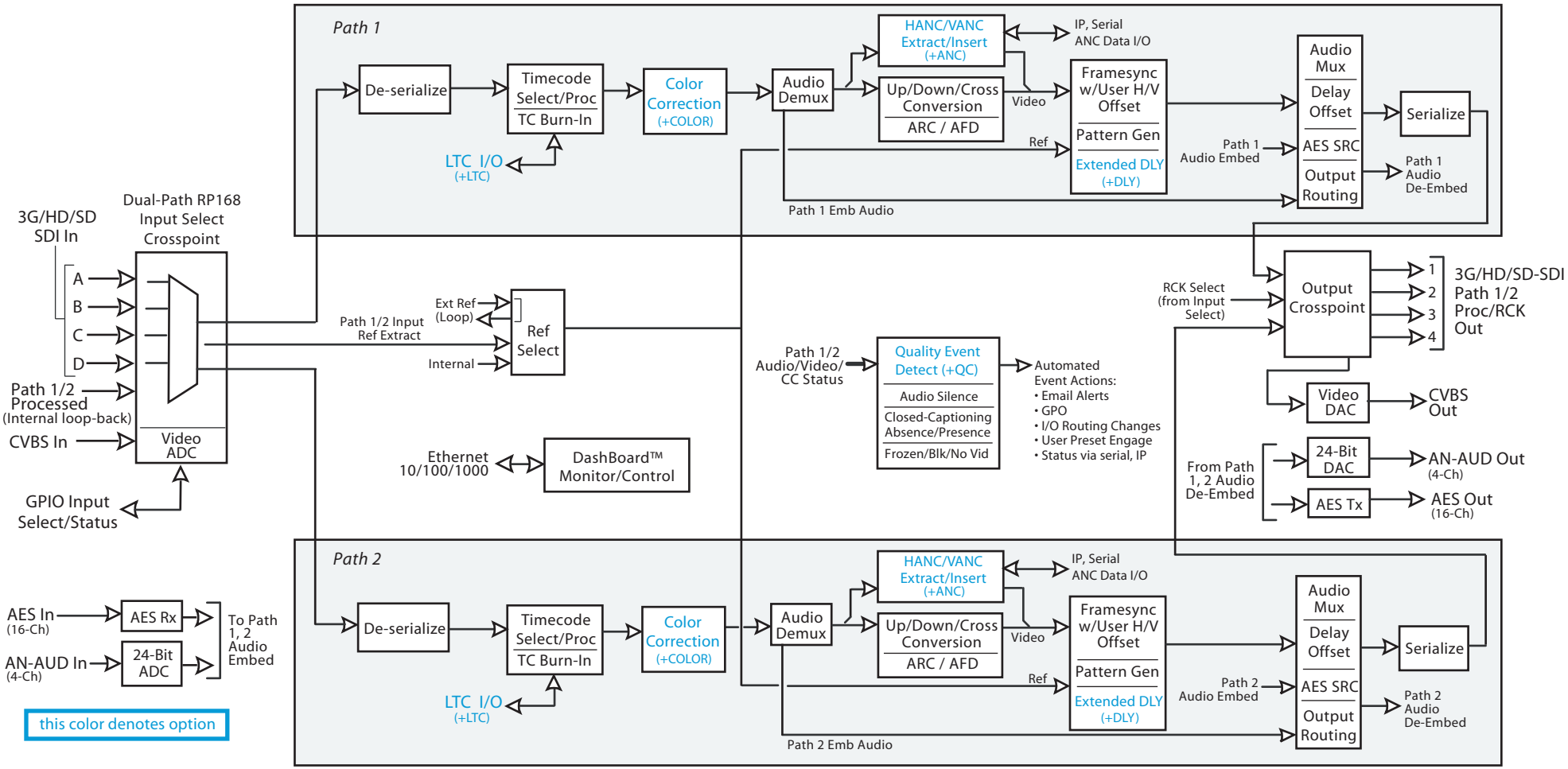

COBALT

Cobalt Digital Inc.
2506 Galen Drive
Champaign IL, 61821

217.344.1243
info@cobaltdigital.com
www.cobaltdigital.com